2-Wire Smart Home Video Intercom SystemsDMC IQ Series





Installation manual

How to install two-wire video intercoms

What did you buy?

These two-wire video intercom systems are the ideal solution for homes with 1 to 5 interiors independent. They can manage up to 4 monitors for each of the 5 internal units (families), and up to 4 Call buttons. Monitors and buttons are connected with just two wires, which carry both data that the power supply and this makes the installation much simpler than the systems traditional video intercoms.

These video intercoms are part of our Smart-Home range which includes many other devices intended for home automation. Simply connect the main monitor to your network. WiFi and you can control your intercom with the Smart Life home automation app, even over the Internet. With the Smart Life app you can also control our remote controls and home automation cameras. This DM series allows you to create your smart home.

This manual explains how to install the DMC-IQ Series 2-wire video intercoms from the point of view of of the hardware installation. For the configuration of the internals and options, refer to the configuration manual.

System components

The DMC-IQ Series video intercom systems are made up of various elements that you can purchase based on your needs

INTERNAL MONITORS

These are devices to be installed inside the house to see who is ringing the bell. intercom, speak hands-free and open the door. The system can manage up to 4 monitors for each of the 5 internals (families). You can easily match a monitor to its right number of family by following the guided setup at first start-up.

If you want to be able to manage your intercom system via app, even via the Internet, you need to connect the each family's main monitor to its own WiFi network.



PUSHBUTTON PANELS

These are the devices that are installed outside the home, near the door that must open. They are equipped with 1, 2, 3, 4 or 5 buttons, depending on the number of internal units you want to manage, and of a camera. They also have audio devices for two-way dialogue between those who are at the door and who answers from the internal monitor.

The system can manage up to 4 keypads and each keypad can control up to 2 locks (one powered by the keypad and one to be powered separately). You can define the number of each keypad 1,2,3 and 4 during the first monitor wizard.

buttons are always matched to families 1,2,3,4,5 in sequence starting from the bottom up the top. This order cannot be changed.

The keypads also have an IC badge reader to open the connected locks by approaching the badge.



IC BADGE

Each keypad or push-button panel equipped with a badge reader is supplied with 5 door opener IC badges.

Additional pieces can be purchased separately



Bus wiring

All the components of a DMC-IQ Series video intercom system are connected via a twisted pair, that is, two cables only, which carry both data and power. The twisted pair constitutes the so-called BUS that connects all the devices together.
You can connect the devices either in cascade, or in series, or in a star by making multiple branches.
We will look at the bus connection in more detail later in the manual.
The cable to be used to create the BUS depends on the length of the cable or rather on the distance of the component from the power supply.



2X0.75mmq of pure copper | Up to 50 meters
2x1mmq of pure copper | Up to 100 meters
2x1.5mmq of pure copper | Up to 150 meters

The UTP network cable**CAT5 or CAT6**It is not the most recommended for making the BUS, however it can be used use as long as it is made of pure copper and with a cross-section for each conductor of at least 0.45 mmq. Yes It uses only one pair of UTP cable, among the 4 contained in the sheath, and can be covered in this so the distance from the power supply is about 30 meters. To increase this distance it is possible pair more pairs to increase the copper cross-section.



1 UTP pair Pure copper | Up to 30 meters

To connect these devices you must not use thin cables, under 0.5 mmq or non-insulated cables. pure copper, because they would introduce a high voltage drop and might not allow the proper functioning of the connected equipment.

Bus power supply

All the devices of these video intercom systems are powered at 24VDC through the twisted pair connection (BUS).
Each system must include at least one 220VAC/24VDC 3A power supply, which connects to the bus and will provide power to all the elements of the system which in this way will not have need to be fed locally.



You can connect the power supply anywhere on the bus, but ideally, it would be convenient connect it in a more or less central position so as to minimize the distance between the power supply and the farthest component. The power supply is almost always placed near the main electrical panel of the building.
The power supply has two 24VDC (+/-) outputs, you can use them interchangeably, just one or both to start with two branches in two different directions, and you can also start two or more bus branches from the same exit.

CONNECTING MULTIPLE POWER SUPPLIES

A single power supply is sufficient to power up to 6 monitors. In a system video intercom, however, the elements that have the greatest absorption are the powered electric locks, possibly connected to the push-button panels. If you connect a powered electric lock, a single power supply will be sufficient for a maximum of 2 monitors.
If you connect too many devices to a single power supply, the most common symptom will be rebooting of the system every time you operate the powered electric lock.
When one power supply is not enough, no problem, you can install a second or even more, simply by connecting them to the bus in series with the main power supply.
You can install the power supplies close to each other, as in the example below, or in spots different from the bus.

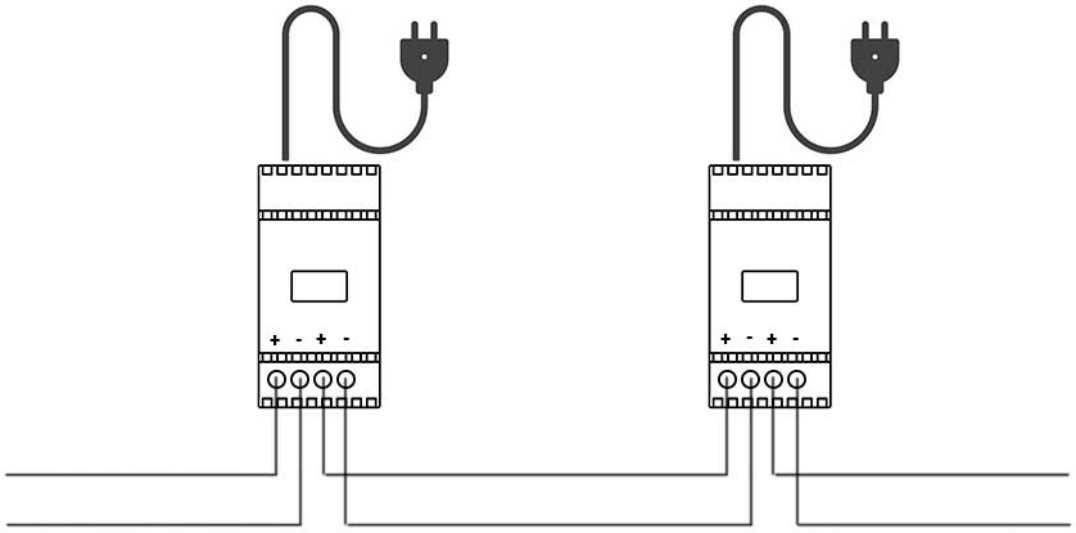

NO POLARITY

Although they are powered by 24VDC the devices do NOT require you to respect the + and – polarity for where there is no need to distinguish between the + and – bus cables. This makes it much simpler wiring and prevents connection errors. The power supply terminals

are distinguished by the + sign and the - sign, but only to identify the two terminals to be used for each bus. Actually you can reverse the wiring without any problems and you can even use two cables of the same same color to make the bus.

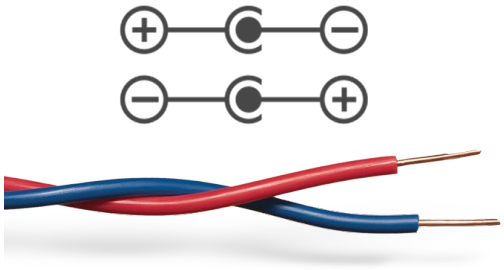

Bus connection

The twisted pair that connects all the elements of the system is commonly called a bus. You are free to make it as you like, depending on how you find it most convenient for passing the cables.
Look at this bus connection example.

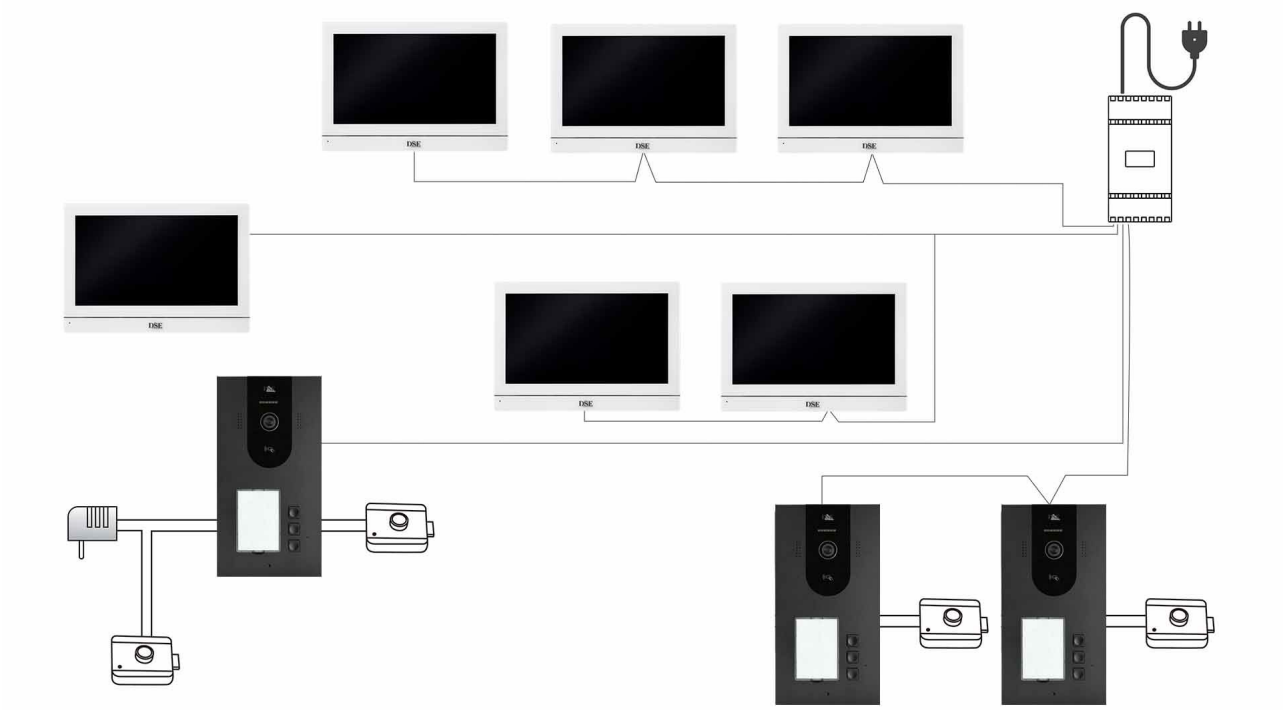

You can start from the power supply with a single twisted pair, or create several more branches directions. In the example above, 4 twisted pairs were connected to the power supply output for proceed in different directions.

SERIES CONNECTION-You can connect the system elements (monitors and keyboards) in series with each other, as in the case of the 3 monitors at the top of the picture. You can connect the 2 wires in input and the two output wires to the same two terminals of the monitor. The keypads also they can connect in series, in cascade one after the other.

STAR CONNECTION-The bus does not have to be a single branch that goes in and out comes out of all the elements of the system, but can also be branched out, creating star connections. As you can see in the example, the first star connection is precisely in the power supply, from which 4 branches depart. Also look at the 3 monitors in the central part of the Our example. The bus starts at the power supply and ends at the monitor on the left. Halfway a branch down was created to connect two monitors in series.

CONNECTING THE LOCKS–The door locks, which are obviously not our supply, they do not connect to the bus, but to the push-button panels, which are normally mounted near at the door. All push-button panels have two door opener controls. The first door opener

(LOCK1) is used to control a 12VDC lock with 2 wires which is powered directly from the keypad. The second door opener (LOCK2) is used for a possible second lock which however will need to be powered by its own separate power supply, for example a automatic gate. LOCK1 are therefore two terminals to which the 12VDC voltage is applied in case of opening, LOCK 2 is only a contact, NO or NC.

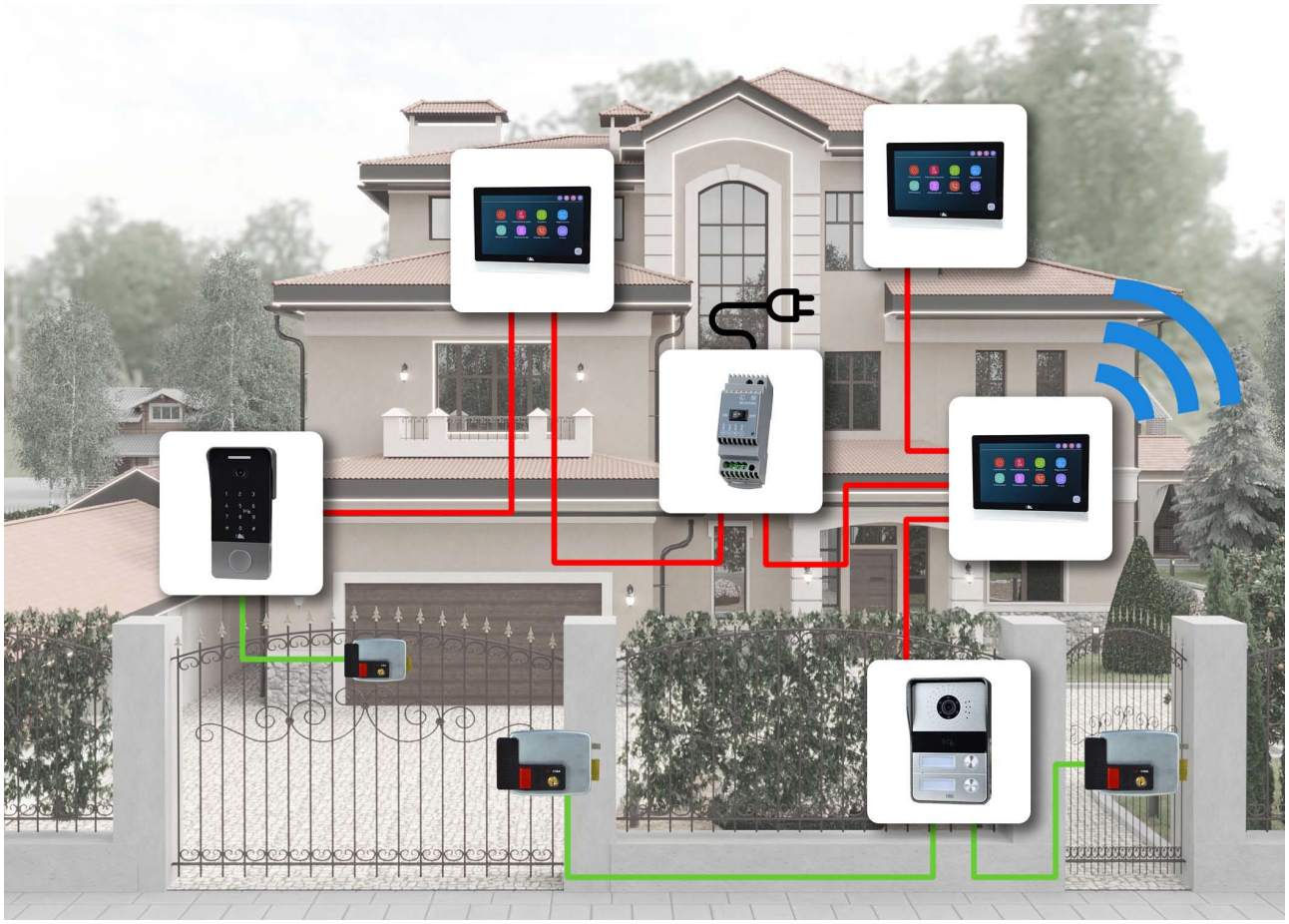

First ignition of the devices

HOW TO CONNECT DEVICES FOR THE FIRST TIME

Unlike our first generation of Domoticam DMC video intercoms, this range DMC-IQ does not require you to connect system elements one at a time.
Here is the**recommended installation sequence**for a good self-configuration of the system.

1 – Connect the main monitor and all the system's push-button panels to the bus
2 – Power on and run the guided setup of the main monitor by indicating it as the first monitor of the system (see configuration manual). At the end of the procedure The monitor will assign IP addresses to the connected keypads.
3 – Connect the other monitors in the system and proceed with their guided configuration, assigning them to their respective families. These monitors can also be connected to the bus immediately, together with the main monitor and keypads, but it is important that the guided setup only AFTER the main monitor.

Each monitor has a guided setup procedure at first start-up, which allows to assign it to the intended functions. This wizard is explained in the manual. configuration.

If you have made a mistake in configuring the system and the result does not satisfy you, you can perform a factory reset. factory parameters in the monitor menu and a reset of the keypads, as explained further forward in the manual.Then you can perform a correct installation again.

Connecting monitors

Each monitor has a two-way removable terminal block on the back for connecting the two-wire bus. There is no need to respect polarity, so you can connect the two wires in any order. If the BUS continues to other downstream devices, you can enter and exit from the same terminals as the terminal block.

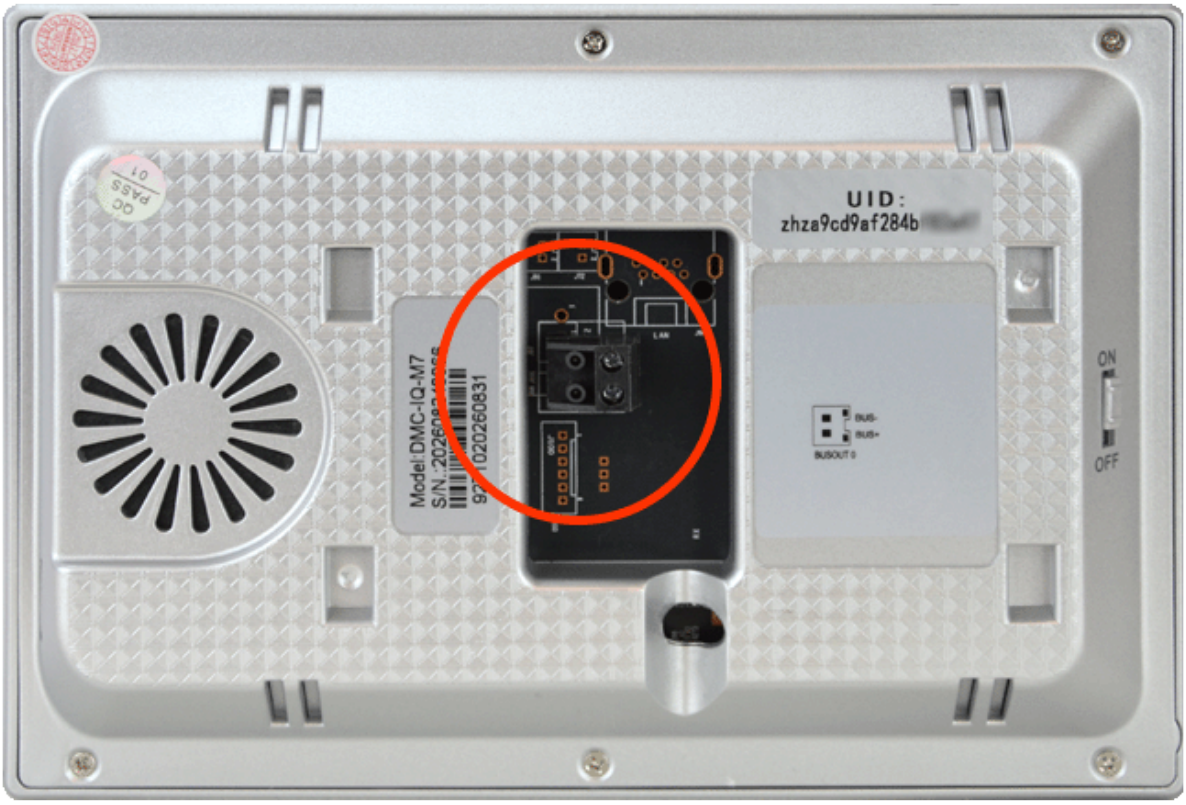

The monitor is mounted on the wall by first fixing the mounting base B to the wall with the plugs A, then connecting the bus to the C monitor which is finally attached to the base.

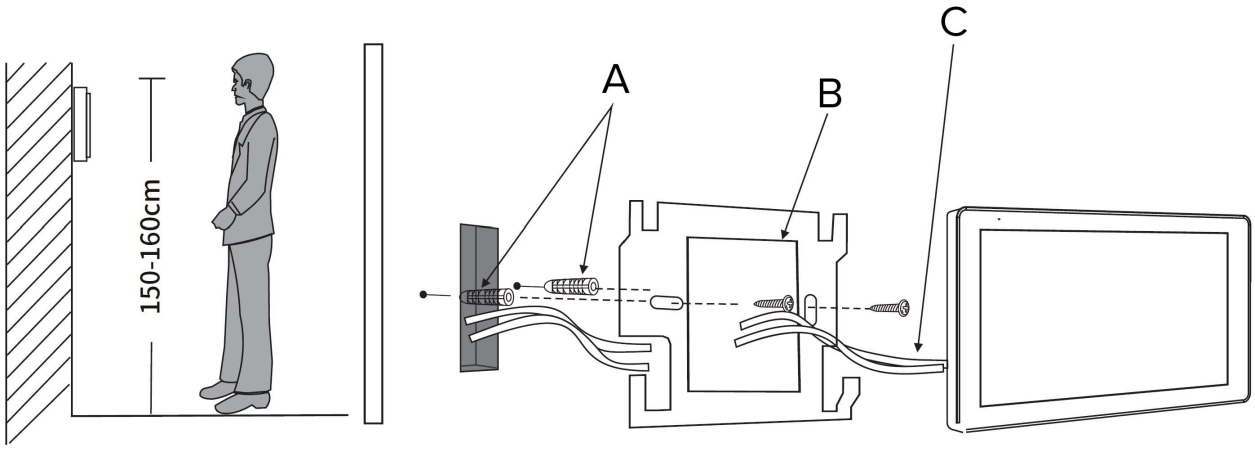
150-160cm
A
B
C

WiFi connection to router

If you want to be able to control your video intercom from your mobile phone you need to connect the main monitor to
Each family has an Internet router. This connection is made via WiFi, without wires.
Before deciding where to place a family's main monitor, check that it receives a
good wifi signal from the router.
Each family can connect their own main monitor to their own router so
completely independent and autonomous.
You can connect each family's main monitor to their own wifi during setup
monitor wizard, at first start, or even later, in the startup menu
configuration, Network section, as explained in the configuration manual.
After you connect the monitor to wifi you can upload it to the Tuya SmartLife app as
explained in the app manual.

Connecting button panels

The keypad is made up of two elements: the keypad and a mounting shell. We proceed first fix the shell to the wall and then connect the keyboard and clip it into the shell.

To separate the shell from the button panel, you need to unscrew the small retaining Allen key with the key provided



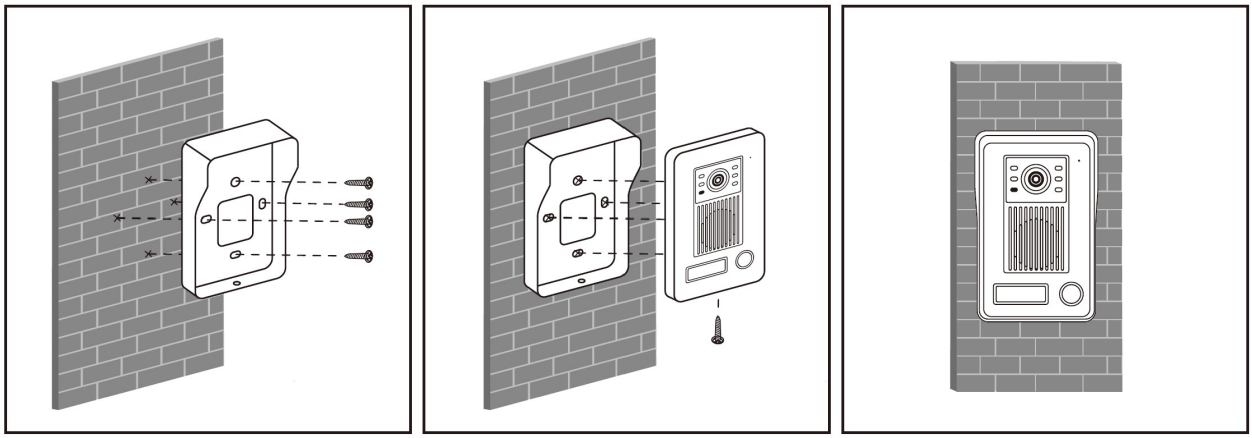

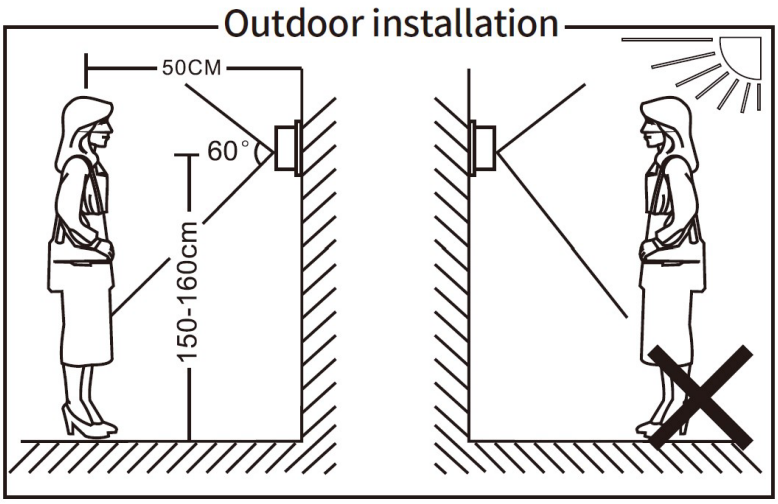

Each button panel has a rear terminal block to connect the bus (A), a relay opening (B), a powered opening (D), and an external door opener button, near the keypad (C).

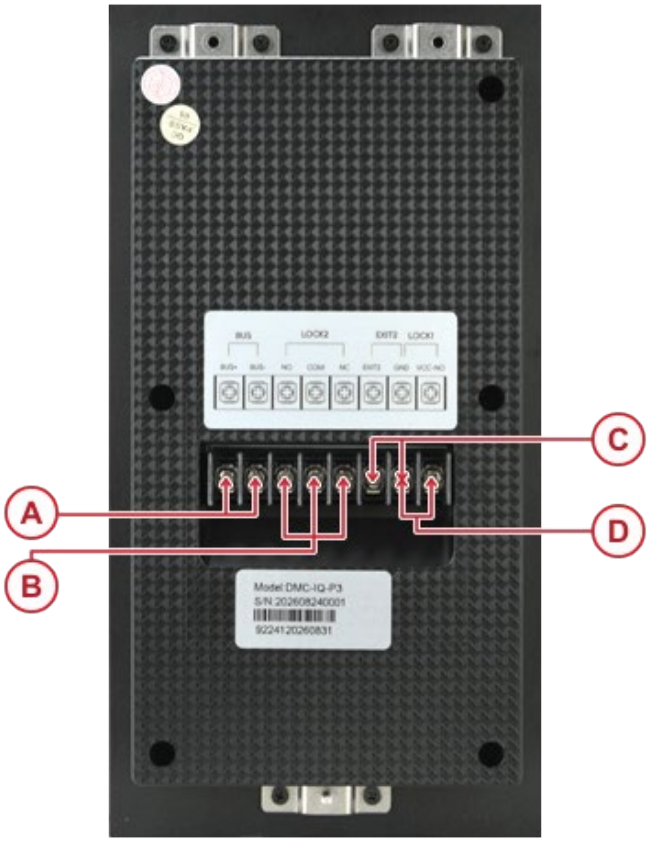

A – Connecting the 24V BUS

B – Connection of the NO/NC relay door opener not powered (LOCK2)

C – External door opener button connection (Opens LOCK1)

D – Door opener connection powered 12VDC max. 800 mA (LOCK1)

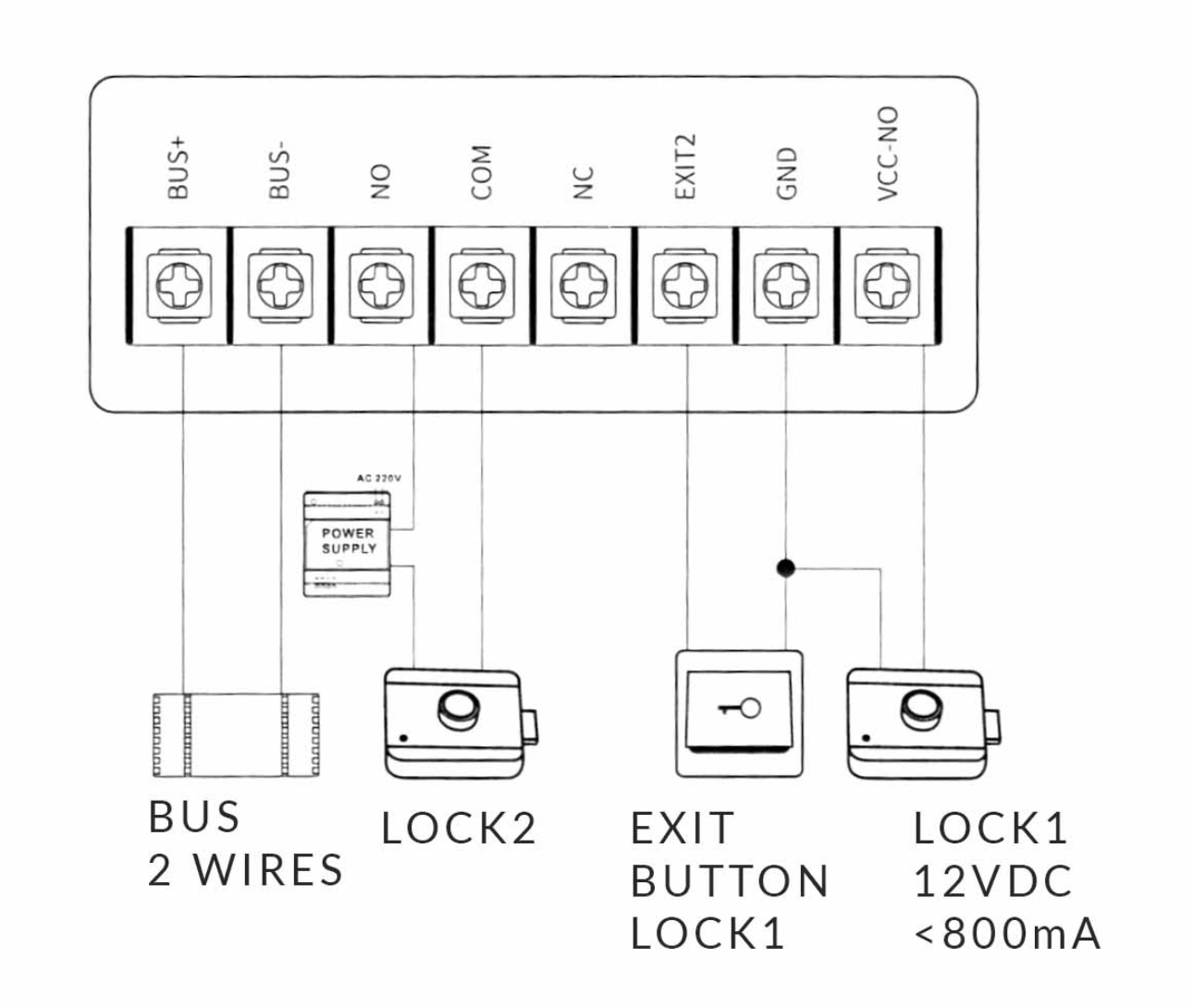

A - BUS CONNECTION

The 2-wire BUS connecting the system elements is connected to the BUS+ BUS- terminals

There is no need to respect polarity, so you can connect the two wires in any order. If the BUS continues to other downstream devices, you can enter and exit from the same terminals as the terminal block.

WARNING: CONNECT ALL PUSHBUTTON PANELS BEFORE SWITCHING ON

It is advisable to connect all the keypads to the bus before the first start-up because, when You will configure the main monitor, you can define the order you prefer (Port 1,2,3,4). See above in the manual the recommended ignition sequence.

The backlight of the keypad keys indicates its configuration status on the system bus:

- Flashing light - Keyboard not configured waiting for address assignment

- Steady lighting – Keyboard configured, with IP address, working.

D - CONNECTION OF 12VDC DOOR OPENER POWERED BY THE PUSHBUTTON PANEL (LOCK1)

If your electric lock is powered by 12VDC you can connect it with two wires to the keypad and it will work without the need for further connections because the keypad will provide it directly the power supply required for opening. This door opener is normally used for the pedestrian door near the push-button panel.

Normally electric locks work in NO (normally open) and provide a short pulse of 2-3 seconds to open. You will use the VCC-NO and GND terminals to connect the electric lock directly.

This LOCK1 output supports 12VDC electric locks with up to 800 mA current draw.

B - CONNECTION OF DOOR OPENER WITH EXTERNAL POWER SUPPLY (LOCK2)

In addition to the powered lock, each keypad can control another lock, LOCK2, with separate power supply. You can use this other connection to control a second door. with independent power supply, such as an automatic gate or garage door.

connector for the LOCK2 lock does not provide power, but only a clean contact from connect between**COM and NO**(normally open), for normal electric locks, and between COM and NC (normally closed) for magnetic locks. In both cases, it is necessary to provide Power the lock with an external power supply, as shown in the figure above.

C – CONNECTION OF EXTERNAL DOOR RELEASE BUTTON

Often an external button is set up, near the keypad and inside the property, to allow those who are leaving to easily open the door. The local door opener button is connects between the EXIT and GND terminals and acts directly on the powered door opener LOCK1.

Inserting labels on the keypad

To enter names on the keypads it is NOT necessary to dismantle the keypad from behind.
Simply remove the clear plastic protection covering the label by prying
gently press your nail on the point shown in the figure.



Under the transparent protection there is a flexible support on which you can write directly or apply small labels.

Inserting SD card

You can insert an SD card into each monitor in the system to record visitor calls.
Additionally the SD card in the main monitor is required for several system functions, such as storing users' photos and hands.
You can insert any micro SD card up to 1TB capacity.



After inserting the SD card you will have to proceed to format it in the settings (SYSTEM SETTINGS/ADVANCED). See the setup manual for details.

Using the keypad

NORMAL CALL

Short press the call button to call the desired extension.

When the call is in progress, a confirmation melody is played. If the keypad does not

unable to make the call because it does not communicate with the internal monitor. A message is emitted

beep-beep error

OPENING WITH BADGE

Bring the badge close to the keypad where the receiver symbol is drawn. If the badge does not

If the keypad is recognized, it emits an error beep.

OPENING WITH FACE RECOGNITION

Approach the keypad camera to a distance of approximately 50 cm. Recognition

It will activate automatically and the door will open within 10 seconds. If the recognition is not

is successful, recognition stops after 10 seconds. It is possible to perform a

new recognition by pressing the call button for three seconds, or by exiting and

returning from the detection area.

OPENING WITH PALM LINE RECOGNITION

Bring the palm of your hand close to the camera to a distance of approximately 10 cm.

recognition will be activated automatically and the door will open within 10 seconds. If the

Recognition is not successful, recognition stops after 10 seconds. It is

It is possible to make a new recognition by pressing the call button for three seconds,

or by exiting and re-entering the detection area.

Storing badges, photos, palm prints

The keypads have an IC badge reader which allows the lock to be opened only by bringing the badge close to the reader. Each keypad with a badge reader displays the reader symbol. on the front and comes with 5 badges included.
Furthermore, these systems can also open the door based on the face captured by the camera or on the palm of the hand shown to the camera.
Both badges and authorized photos and palms are configured from the main monitor.
See the setup manual for details.

Reset keypads

The keypads are numbered Port 1,2,3,4 during the monitor setup wizard main. If you are not satisfied with the numbering you have set, you can reset the factory settings of the keypads.
This reset deletes the keyboard's IP address and allows you to reconfigure it in the system as if it were connected for the first time.
ATTENTION – If you do not want the keypad to immediately take a new address after the reset, disconnect the monitors from the bus before resetting the keypad.

To reset, proceed as follows:
1 – Disconnect the keypad from the bus. The keypad turns off.
2 – Connect the keypad to the bus
3 - Press the call button within 20 seconds of turning on and hold it for 5 seconds until you hear a beep-beep-beep, then release the button.
4 - The reset is complete.

If the main monitor is connected to the bus, the keypad will receive a new address and will be reconfigured. If there is no main monitor it will remain with the LEDs flashing, in waiting for configuration.